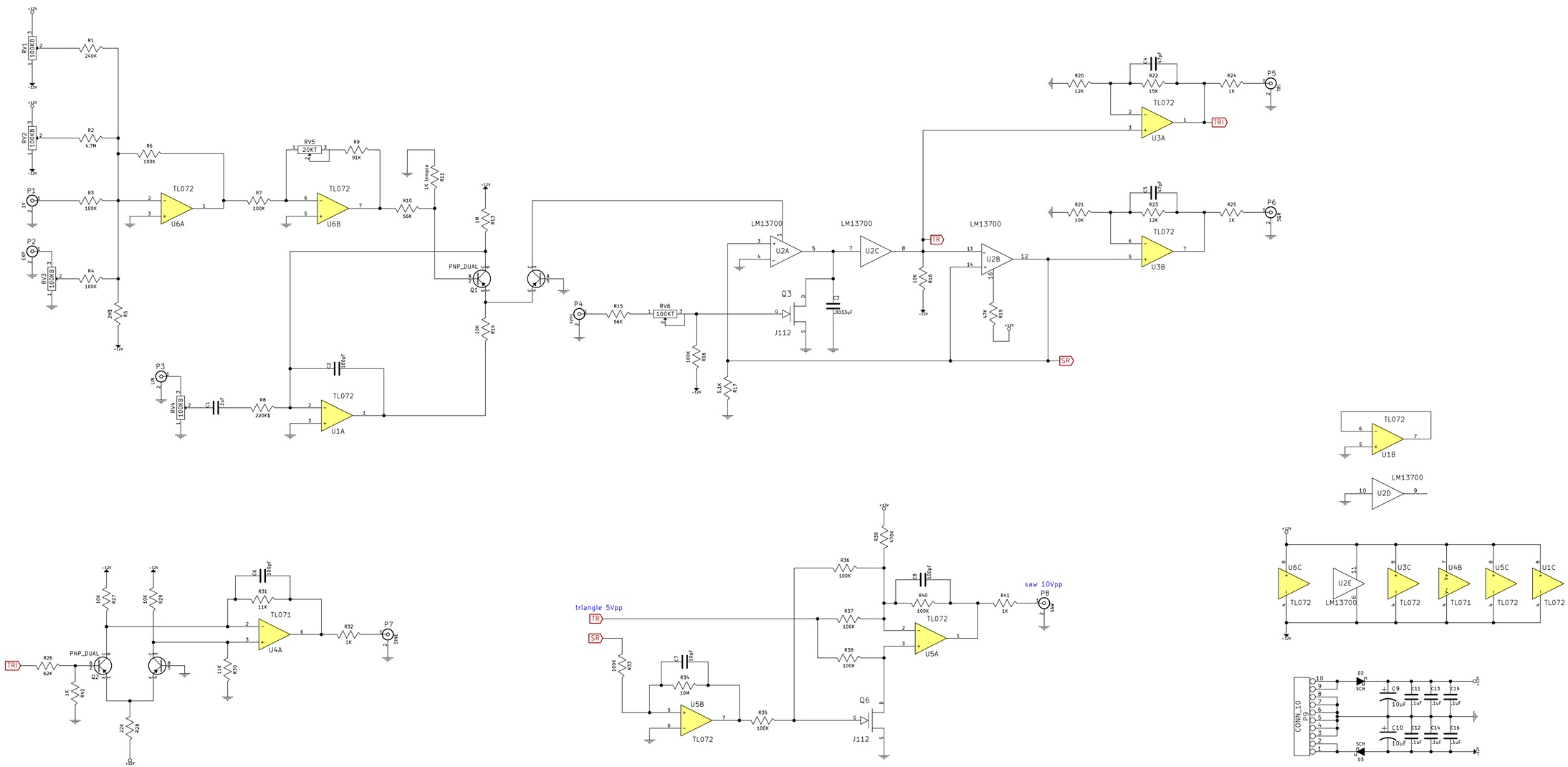

File: vco_experiment.sch		
Sheet: /		
Title:		
Size: User	Date: 1 may 2018	Rev:
KiCad E.D.A.		Id: 1/1