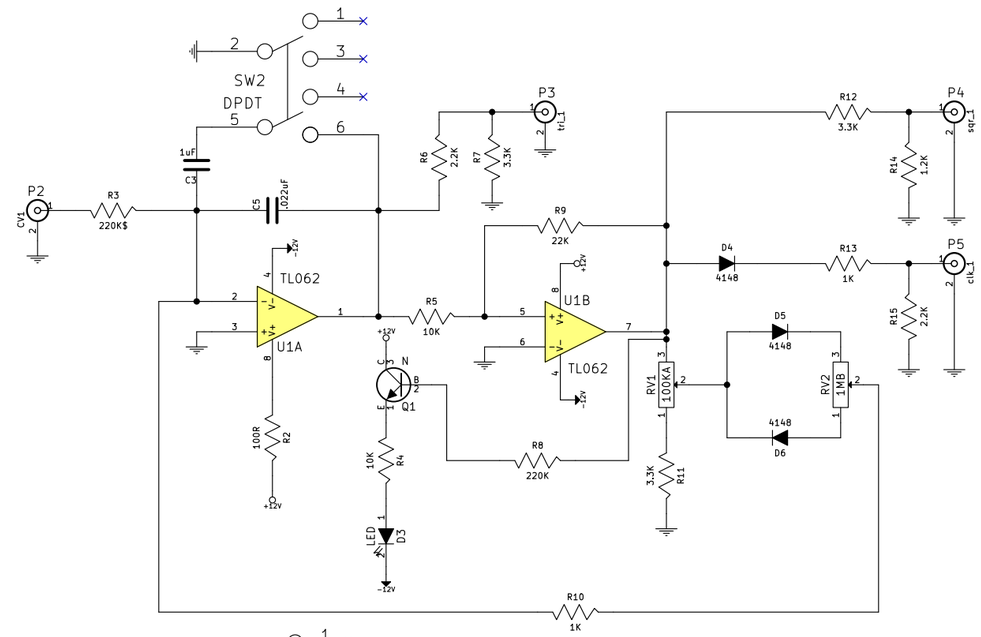

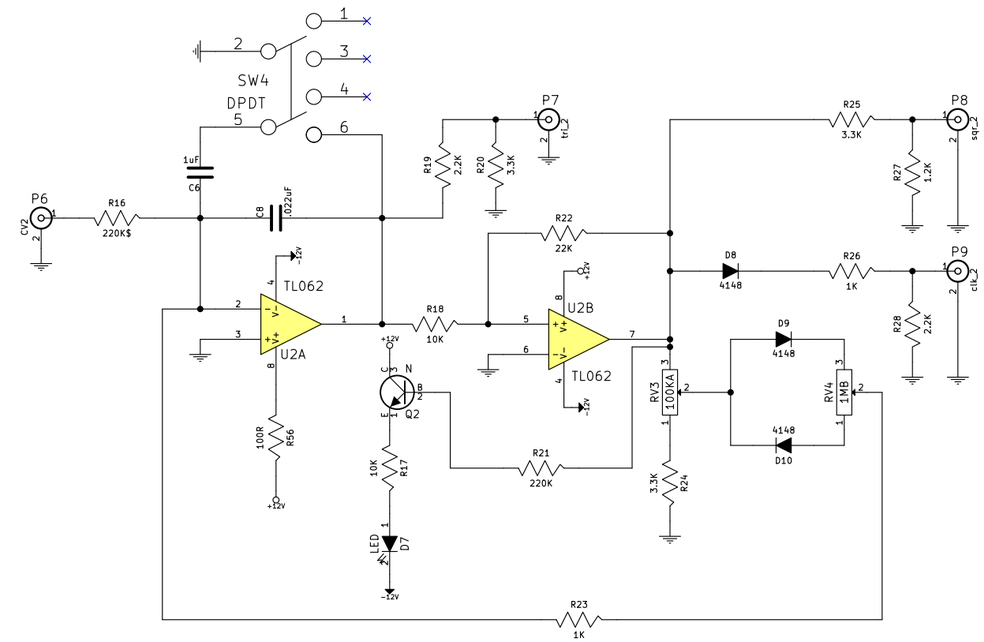

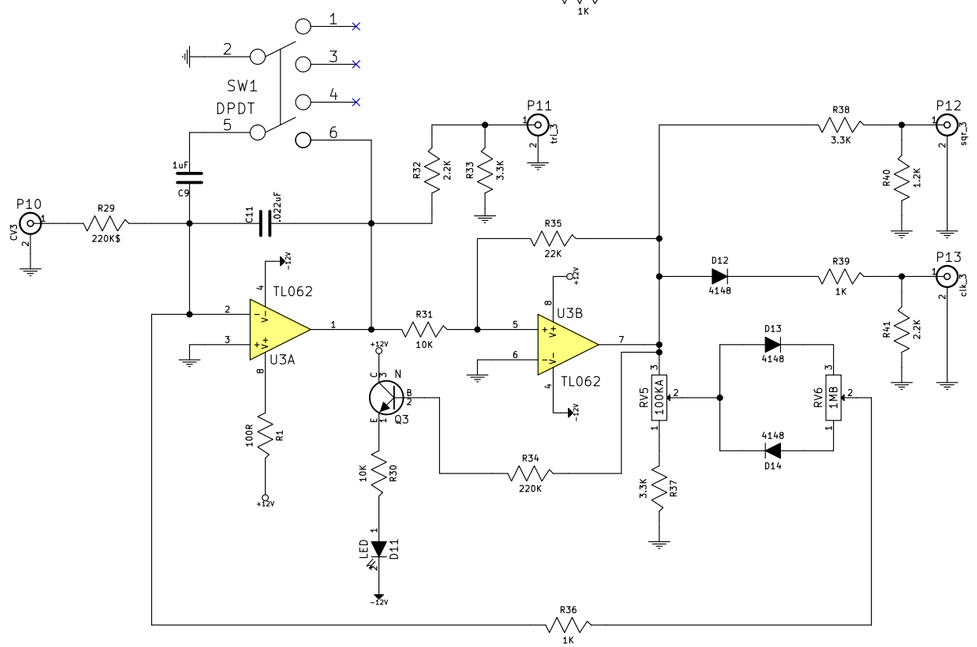

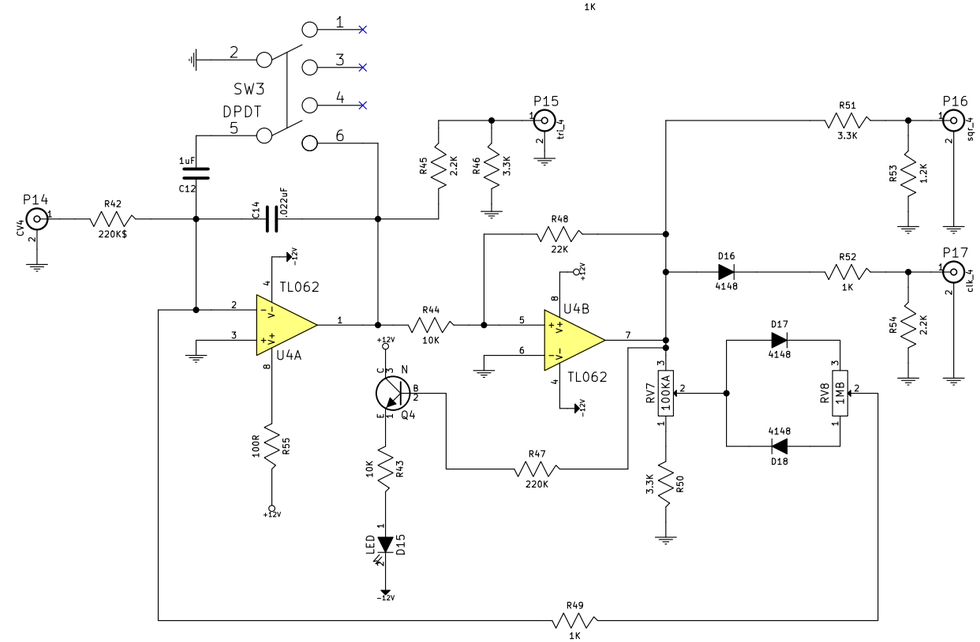

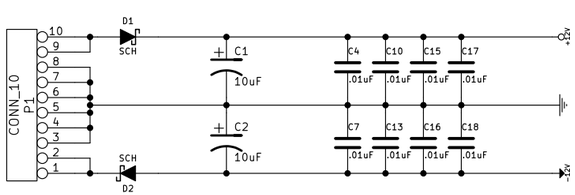

File: qvclfo.sch		
Sheet: /		
Title:		
Size: User	Date: 12 may 2017	Rev:
KiCad E.D.A.		Id: 1/1