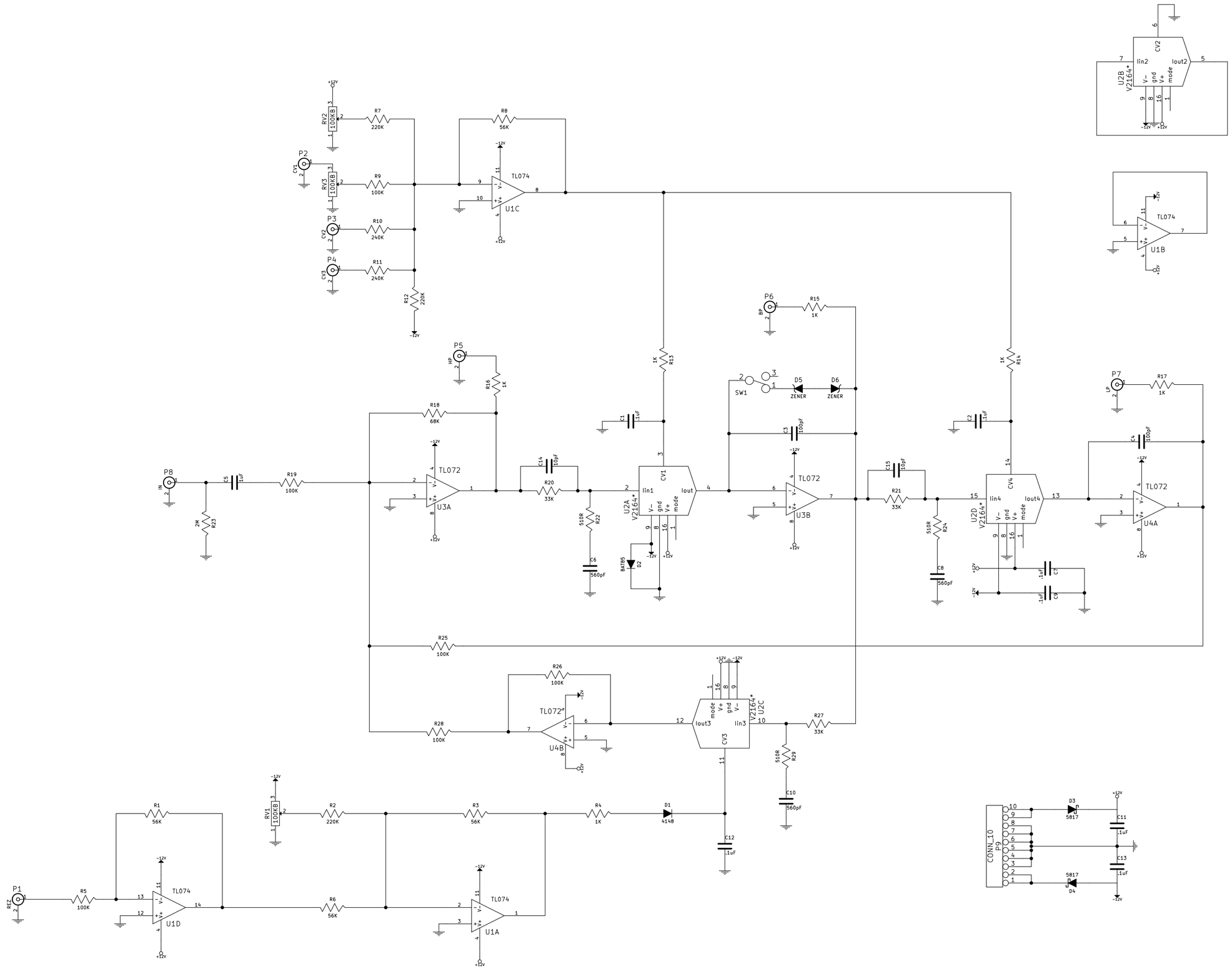

File: NRvcf_V2.sch	
Sheet: /	
Title:	
Size: User	Date: 27 apr 2017	Rev:
KiCad E.D.A.	Id: 1/1